Brilliant
THE JEWEL IN LIGHTING

Hanni LED WA2
G96254...
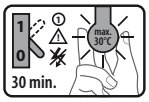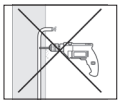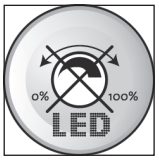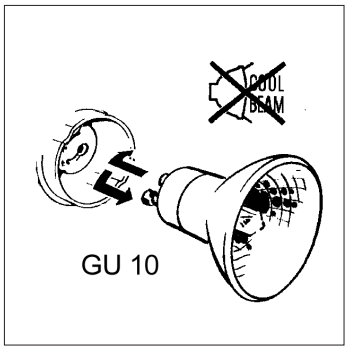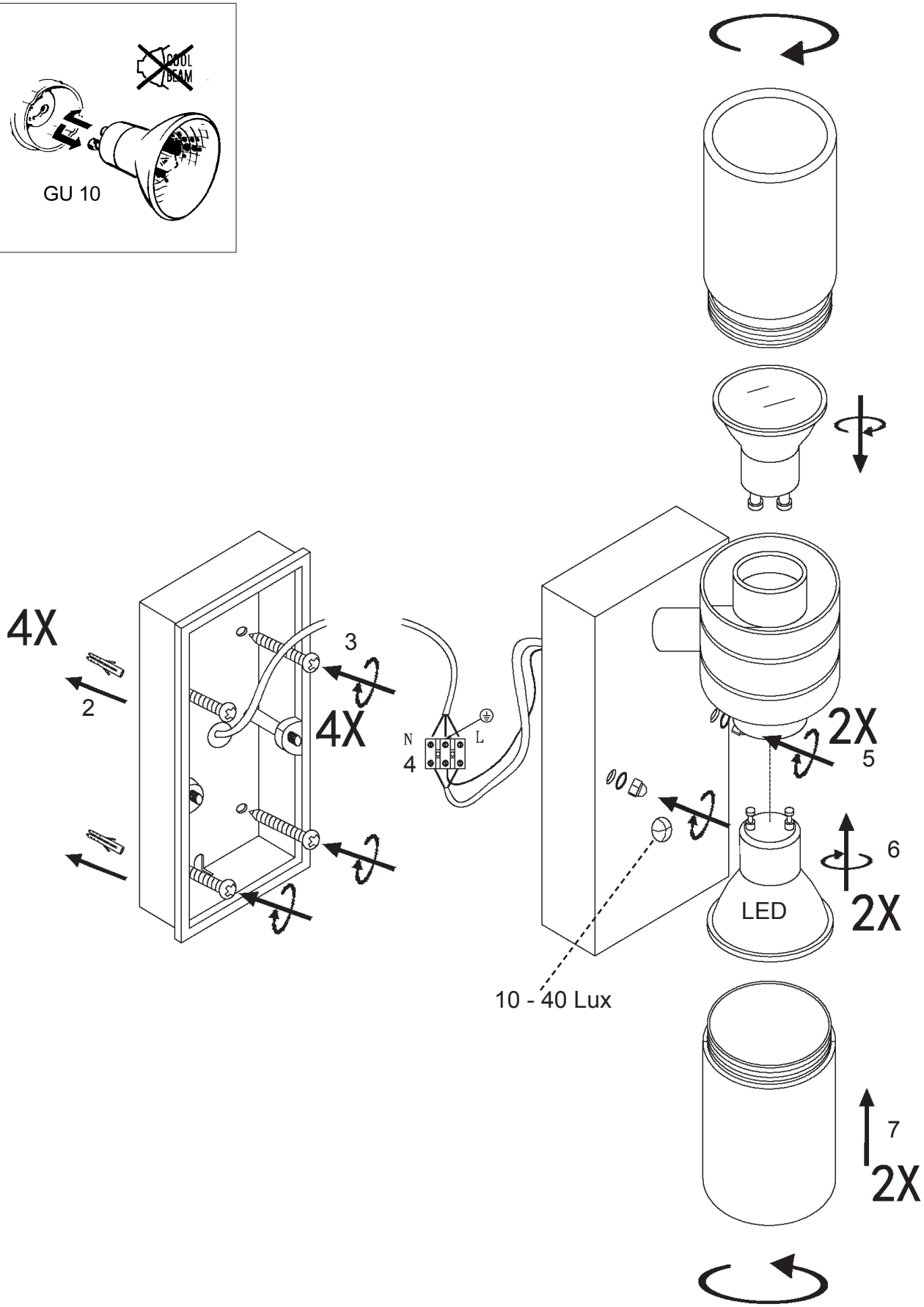
07.15